Energy-Aware Processor Management for Virtual Machines

Jan Stoess **Christian Lang** **Marcus Reinhardt**

System Architecture Group University of Karlsruhe, Germany

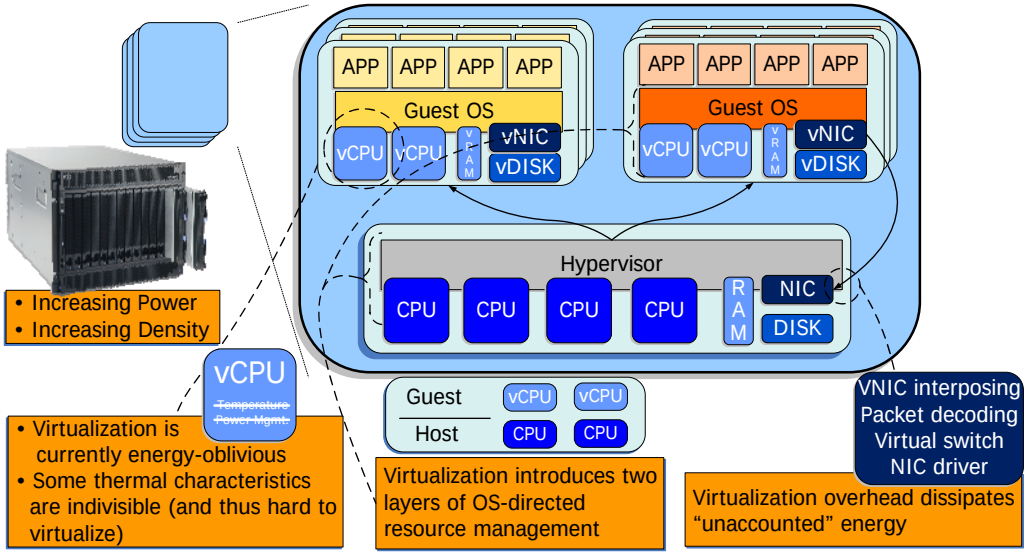

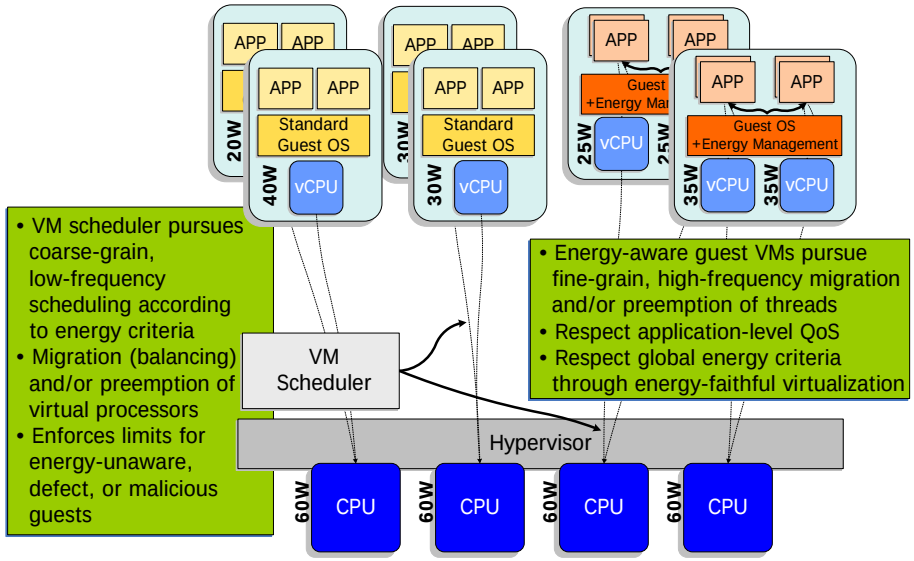

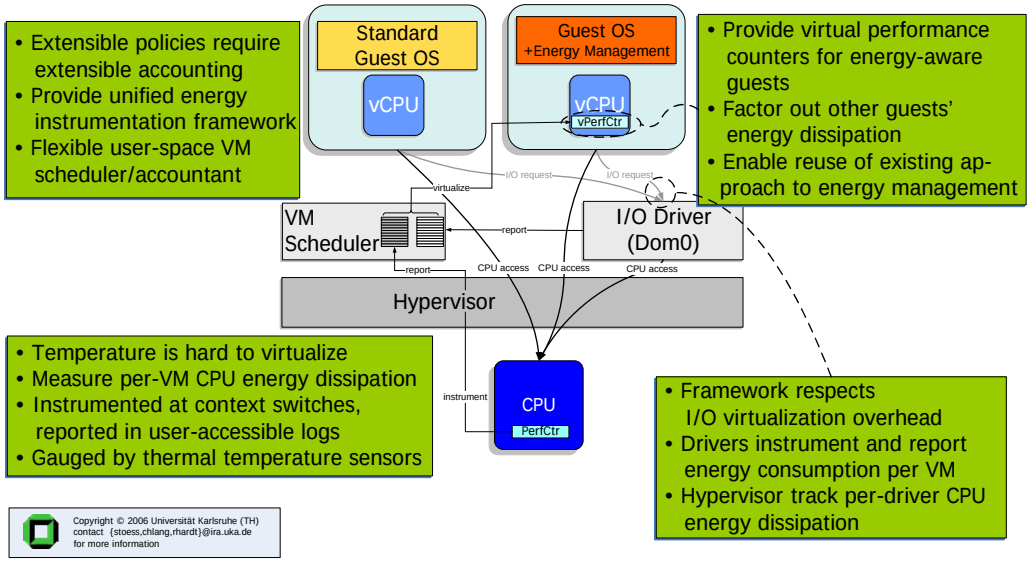

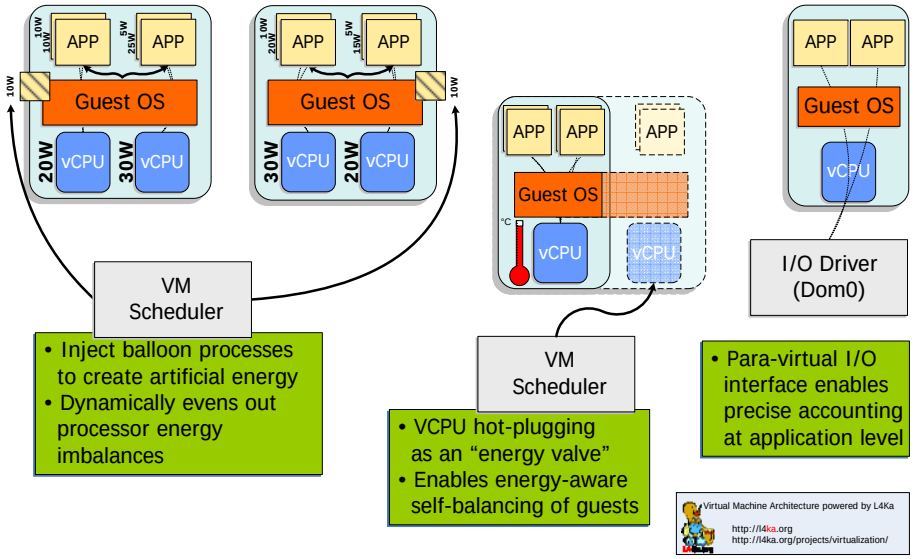

Copyright © 2006 Universität Karlsruhe (TH)
contact {stoess,chlang,rhardt}@ira.uka.de
for more information

Virtual Machine Architecture powered by L4Ka
http://l4ka.org
http://l4ka.org/projects/virtualization/